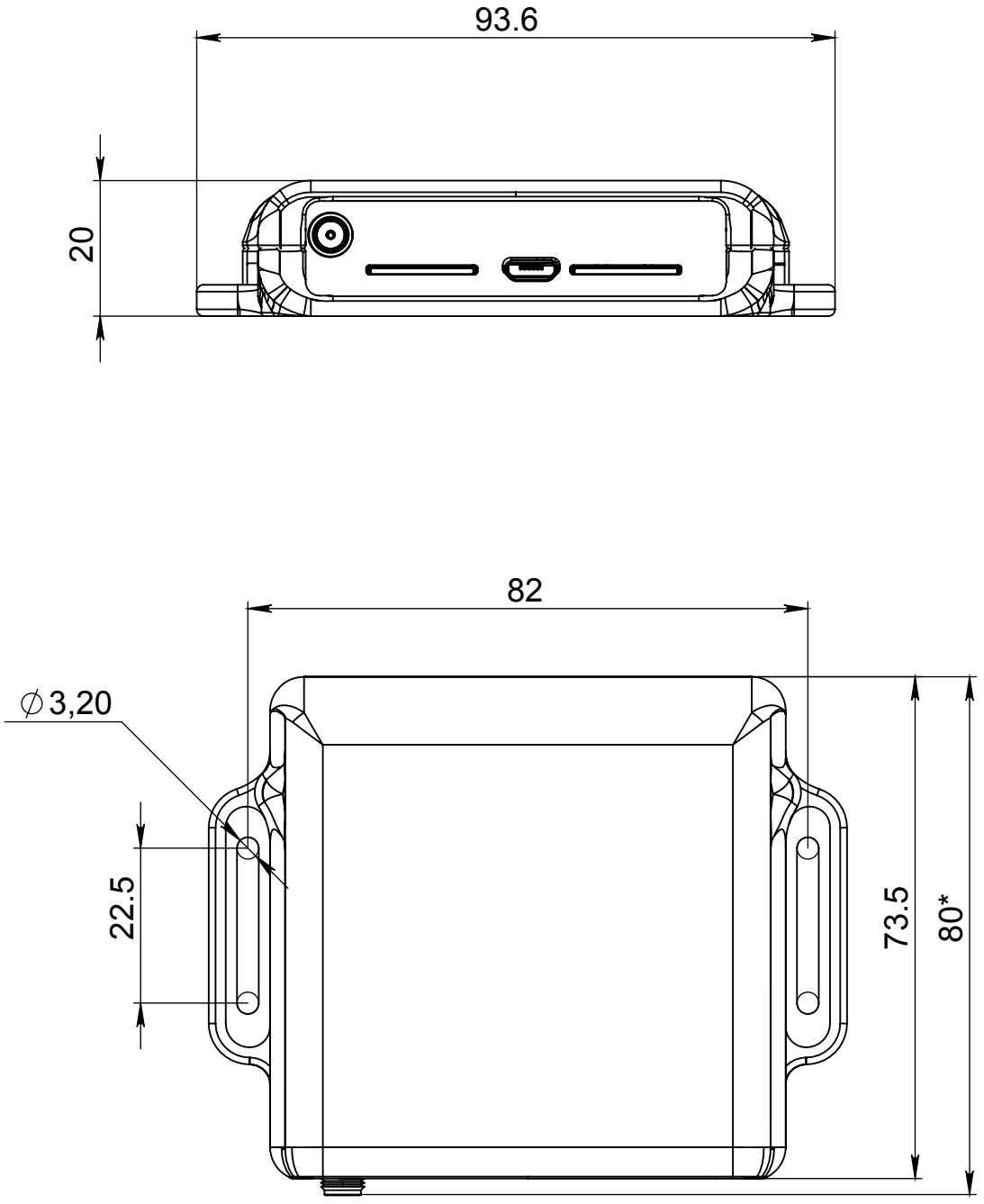
93.6
20
82
∅3,20
22.5
73.5
80*